

Tango G3 - BVP38x

BVP383 LED450/CW 400W 220-240V SMB GM

-

The energy-saving Philips Tango G3 LED Floodlight is the ideal solution for a wide range of Area lighting applications. It incorporates the LED light source, optical system, heat sink and driver into one compact and robust housing that meets globally recognized safety standards. Its specially designed heat sink incorporates aesthetics and functionality to ensure excellent reliability. Powered by LED technology, this luminaire delivers superior performance and a longer lifetime, bringing area lighting to a whole new level.

Product data

General Information	
Lamp family code	-
Light source color	Cool white
Light source replaceable	Yes
Driver/power unit/transformer	Power supply unit
Driver included	Yes
Optical cover/lens type	Polycarbonate micro lens optic
Luminaire light beam spread	50°
Control interface	-
Connection	Flying leads/wires
Cable	Cable 1.5 m without plug
Protection class IEC	Safety class I
Flammability mark	-
CE mark	CE mark
ENEC mark	-
Warranty period	3 years
Optic type outdoor	Symmetrical medium beam
RoHS mark	-

Light source engine type	LED
Light Technical	
Standard tilt angle posttop	-
Standard tilt angle side entry	-
Operating and Electrical	
Input Voltage	220-240 V
Input Frequency	50 or 60 Hz
Power Factor (Min)	0.95
Controls and Dimming	
Dimmable	No
Mechanical and Housing	
Housing Material	Aluminum die cast
Reflector material	-
Optic material	Polycarbonate

Tango G3 - BVP38x

Optical cover/lens material	Polycarbonate
Fixation material	Steel
Mounting device	Mounting bracket adjustable
Optical cover/lens shape	-
Optical cover/lens finish	Frosted
Overall length	591 mm
Overall width	114 mm
Overall height	603 mm
Effective projected area	0.29 m²
Color	Aluminum and gray

Approval and Application

Ingress protection code	IP66 [Dust penetration-protected, jet-proof]
Mech. impact protection code	IK08 [5 J vandal-protected]
Surge Protection (Common/Differential)	Luminaire surge protection level until 15 kV differential mode and 15 kV common mode

Initial Performance (IEC Compliant)

Initial luminous flux (system flux)	45000 lm
Luminous flux tolerance	+/-10%
Initial LED luminaire efficacy	110 lm/W
Init. Corr. Color Temperature	5700 K
Init. Color Rendering Index	>70
Initial chromaticity	SDCM< 7
Initial input power	400 W
Power consumption tolerance	+/-10%

Application Conditions

Ambient temperature range	-40 to +50 °C

Product Data

Full product code	911401695503
Order product name	BVP383 LED450/CW 400W 220-240V SMB GM
Order code	911401695503
Numerator - Quantity Per Pack	1
Numerator - Packs per outer box	1
Material Nr. (12NC)	911401695503
Net Weight (Piece)	12.499 kg

IP66 IK08

Dimensional drawing

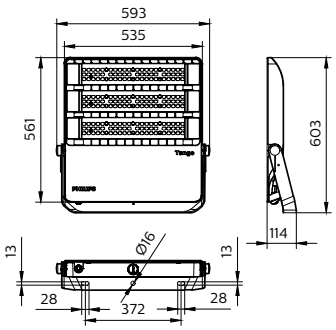

BVP38x Tango G3

© 2019 Signify Holding All rights reserved. Signify does not give any representation or warranty as to the accuracy or completeness of the information included herein and shall not be liable for any action in reliance thereon. The information presented in this document is not intended as any commercial offer and does not form part of any quotation or contract, unless otherwise agreed by Signify. Philips and the Philips Shield Emblem are registered trademarks of Koninklijke Philips N.V.